50MC

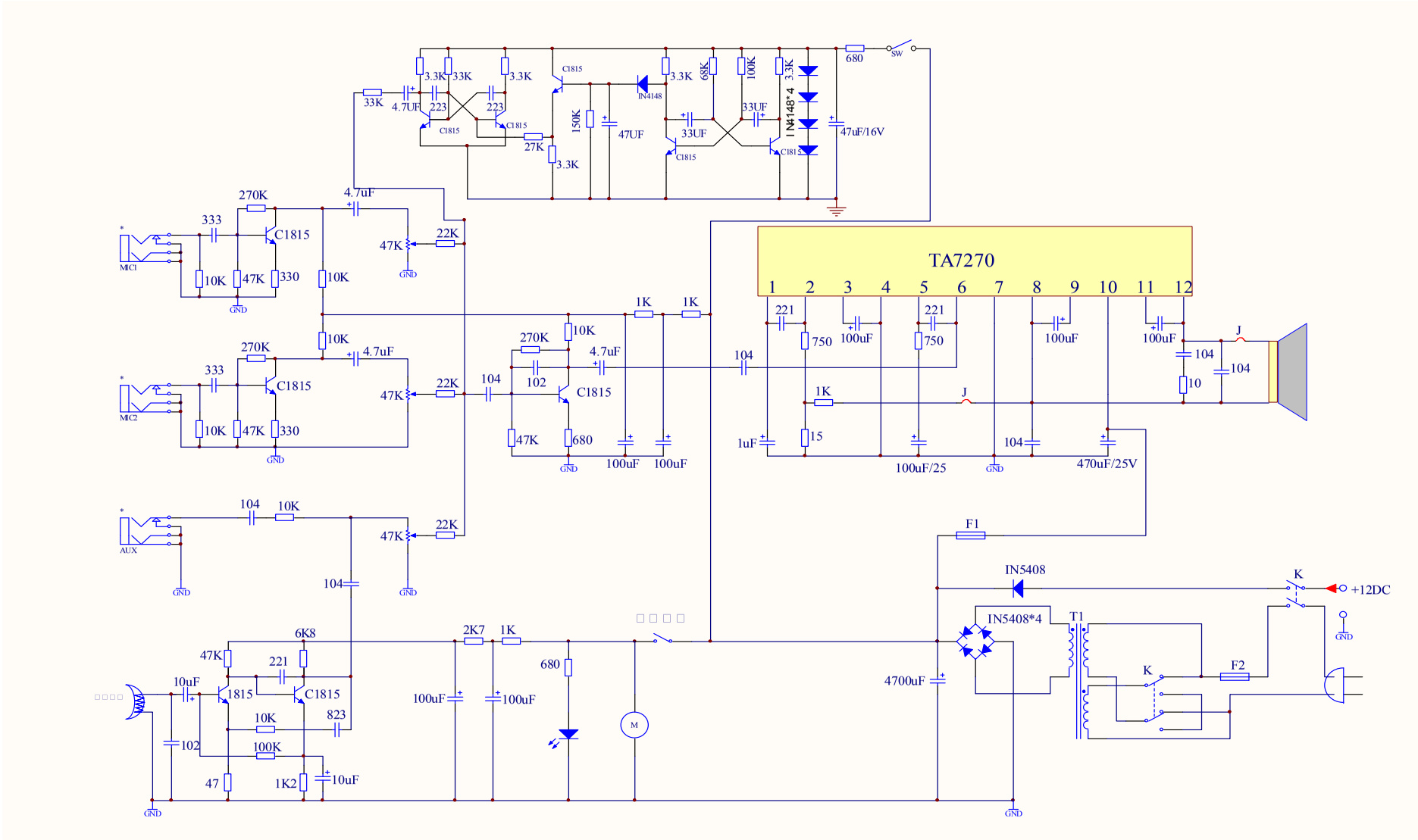

TA7270
1 2 3 4 5 6 7 8 9 10 11 12
MIC1
MIC2
AUX
C1815
1815
IN4148
IN4148*4
IN5408
IN5408*4
+12DC
SW
GND