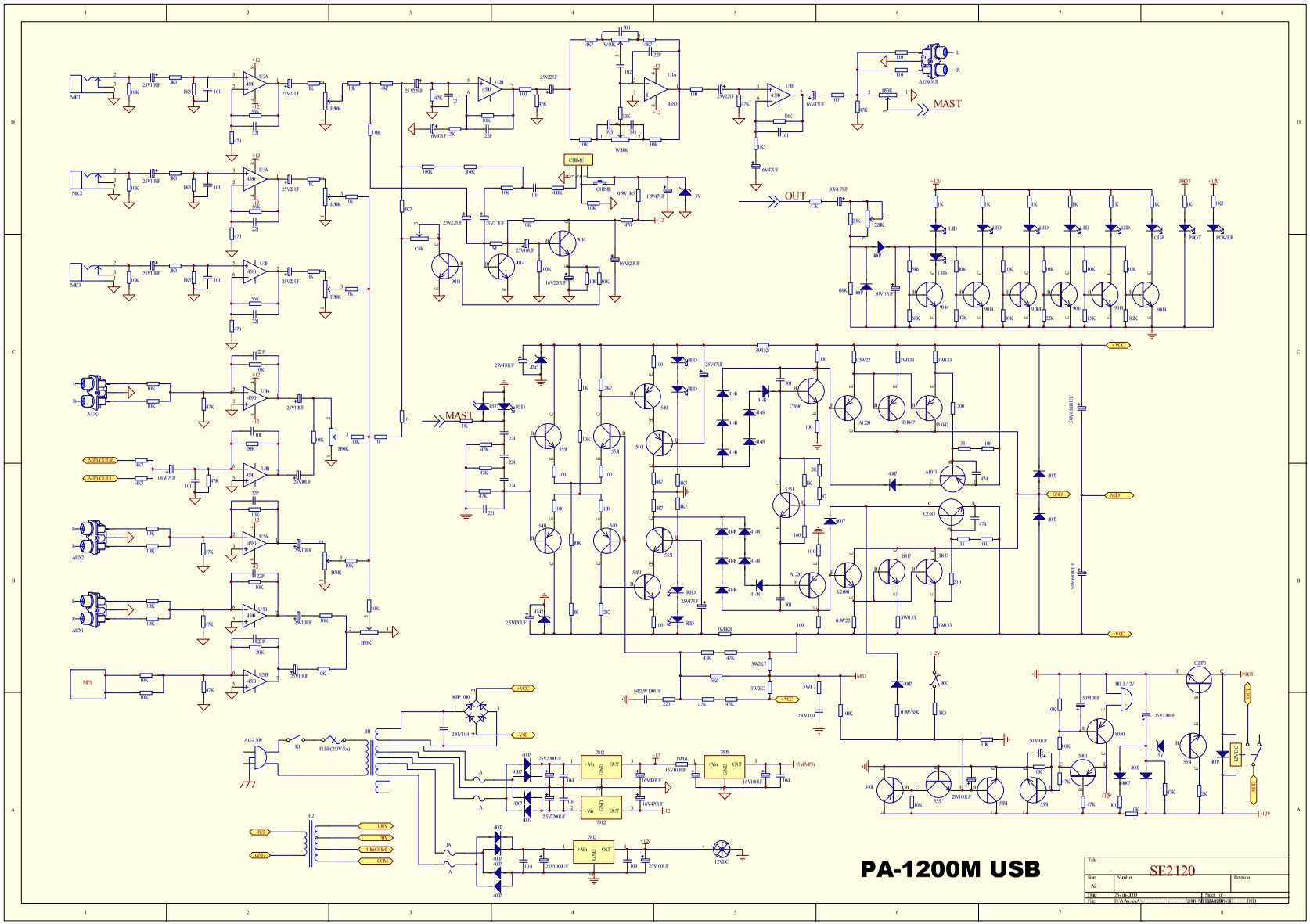
MAST
OUT
MAST
PA-1200M USB
SE2120
Title
Size
A2
Number
Revision
Date
26-Jun-2009
Sheet of
File
D:\A\AAAA\ 2009-NEW\SE2120\SE2120.DSB