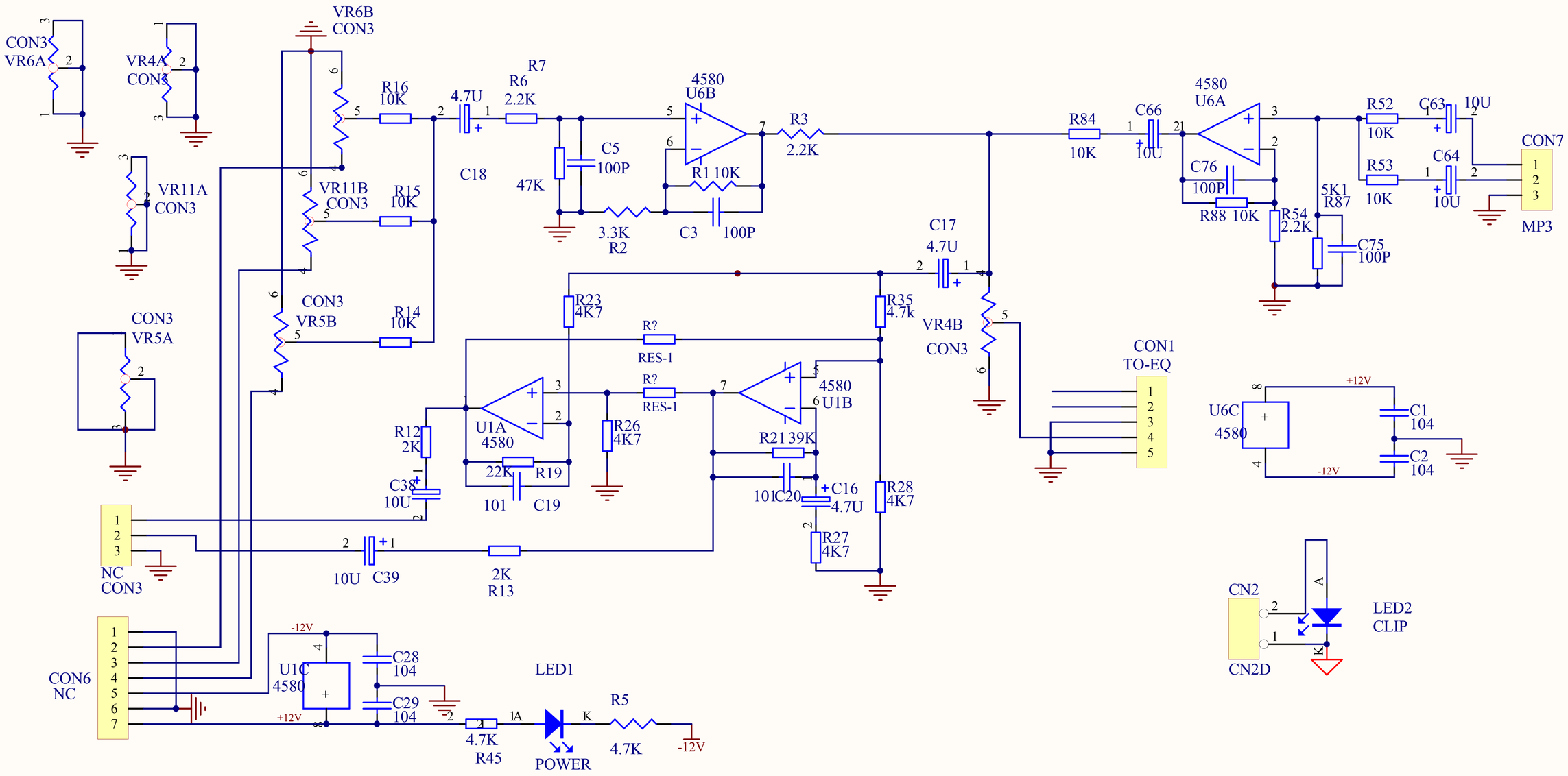
CON3
VR6A
VR4A
CON3
VR11A
CON3
VR6B
CON3
VR11B
CON3
CON3
VR5B
CON3
VR5A
R16
10K
R15
10K
R14
10K
4.7U
C18
R7
R6
2.2K
47K
C5
100P
3.3K
R2
4580
U6B
R1 10K
C3
100P
R3
2.2K
R84
10K
C66
10U
4580
U6A
C76
100P
R88 10K
R54
2.2K
5K1
R87
C75
100P
R52
10K
R53
10K
C63
10U
C64
10U
CON7
MP3
C17
4.7U
R23
4K7
R35
4.7k
VR4B
CON3
R?
RES-1
R?
RES-1
U1A
4580
R12
2K
C38
10U
22K
R19
101
C19
R26
4K7
4580
U1B
R21 39K
101
C20
C16
4.7U
R28
4K7
R27
4K7
CON1
TO-EQ
U6C
4580
+12V
-12V
C1
104
C2
104
NC
CON3
10U
C39
2K
R13
CON6
NC
U1C
4580
-12V
+12V
C28
104
C29
104
4.7K
R45
LED1
POWER
R5
4.7K
-12V
CN2
CN2D
LED2
CLIP